King County

# EVACUATION RESOURCES

## MAY 14, 2008

# Contents


**1 Introduction ..... 3**
- 1.1 Purpose of Document ..... 3
- 1.2 Document Organization ..... 3

**2 Resource Management ..... 4**

**3 Ordinances ..... 5**
- 3.1 Federal ..... 5
- 3.2 State of Washington ..... 6

**4 Policies and Procedures ..... 6**

**5 Operational Facilities ..... 7**
- 5.1 Emergency operations centers ..... 8
- 5.2 Traffic management centers (TMCs) ..... 8

**6 Situational Awareness ..... 9**

**7 Communication Networks ..... 10**
- 7.1 Communication Among Agencies ..... 11
- 7.2 Communication to the Public ..... 13

**8 Intelligent Transportation Systems ..... 14**
- 8.1 The Role of ITS in Emergency Evacuation ..... 14
- 8.2 Using Existing ITS Assets in an Evacuation ..... 14
- 8.3 Developing an Evacuation 'Concept of Operations' ..... 15
- 8.4 The Regional ITS Planning Framework ..... 15
- 8.5 Integrating ITS into Evacuation Planning: A Step-by-Step Process ..... 17
- 8.6 Operational Benefits of ITS ..... 18

**9 Sheltering Facilities ..... 20**
- *9.1.1 PETS Act ..... 22*
- *9.1.2 Inquiry System ..... 22*
- *9.1.3 Shelter Factors ..... 22*
- 9.2 Assembly Points ..... 23
- 9.3 General Population Shelters ..... 23
- 9.4 Special Needs Shelters (SpNS) ..... 23
- 9.5 Pet Sheltering ..... 24
- 9.6 Shelters for Unique Populations (SUP) ..... 24
- 9.7 Shelter Support ..... 24
- *9.7.1 Shelter Staffing ..... 24*
- *9.7.2 Shelter Commodities ..... 25*
- *9.7.3 Shelter Medical ..... 25*
- *9.7.4 Shelter Communications ..... 26*

**10 Vehicles** ..... **27**
10.1 Transportation Modes ..... 28
10.2 Passenger Vehicle Sources and Capacities ..... 28
10.3 Emergency Response and Support Vehicles ..... 29
**11 Miscellaneous Materials** ..... **30**

# 1 Introduction

Evacuations are incredibly resource-intensive and require significant personnel, facilities, and assets to implement successfully. As part of the planning and preparation process, agencies need to determine what resources they will have available, as well as what resources they will need to perform their designated roles during an evacuation.

## 1.1 Purpose of Document

This document provides evacuation planners and managers with an overview of the types of resources needed to conduct an evacuation effectively. These include institutional, physical and legal resources that are necessary to support the various evacuation phases and activities that are likely to occur.

This document is not designed to serve as a specific inventory of necessary resources, since such a list will vary significantly depending on the circumstances and needs of each jurisdiction. It is written to help evacuation planners understand the types of resource issues they will need to consider and address during their planning process and subsequent preparedness activities.

It may be beneficial to consider the resources required in terms of each phase of an evacuation, as there could be some significant differences depending on what a jurisdiction is trying to accomplish. For example, the resources required to run a shelter are completely different from those required to designate and manage evacuation routes. In many cases, an agency may not have all of the resources it expects to require, and may need to coordinate with other agencies or sources to establish sharing arrangements and mutual aid agreements. This situation will likely be exacerbated during a no-notice incident, when agencies will have less time to identify, obtain, and position resources, and will need to rely on only locally-available or pre-positioned equipment.

In some cases, many of the needed resources may already exist and be well positioned to serve during an evacuation. Each jurisdiction, however, will need to conduct an assessment of its resources and identify gaps to be corrected. Some resources, such as ordinances, plans, and procedures require significant effort in advance of being needed for an evacuation. Emergency managers should plan and schedule their efforts accordingly. Others will require coordination with neighboring jurisdictions, both to prepare comprehensive inventories and to determine arrangements for resource sharing where appropriate.

## 1.2 Document Organization

Since the execution of a successful evacuation will require a large amount of diverse resources, emergency management agencies in charge of an evacuation will need to ensure they have the proper types and quantities of assets at their disposal. These include:

- Ordinances

- Policies and procedures
- Operational facilities
- Situational awareness networks
- Communications networks
- Intelligent Transportation Systems (ITS)
- Sheltering facilities
- Vehicles
- Miscellaneous materials

This document includes a chapter for each of the categories listed above, with descriptions of relevant components and issues to be considered.

# 2 Resource Management

Before discussing specific types of resources, it is important to highlight the issue of effective management of those resources. "Resource management" is the identification, tracking and tasking of assets, during both everyday preparedness efforts and emergency response activities. Successful resource management will enable and support the effective use of assets during an emergency. Resource management is an integral component of the National Incident Management System (NIMS) and the Incident Command System (ICS) mandated for jurisdictions in the United States. As such, it is very likely that some degree of resource management is already being done in your jurisdiction.

ICS dictates that resources are categorized by type and kind.

- '**Kind**' describes what the resource is (e.g., Operations Section chief; ambulance; police officer; tow truck; excavator)
- '**Type**' describes the size, capability, and staffing qualifications of a specific kind of resource

A common example given to illustrate the importance of "typing" resources has to do with a hazmat incident. In response to a hazmat spill, a jurisdiction requests a hazmat team, with the expectation that they will be equipped with full hazmat Level A suits; instead, the team that arrives on scene is equipped with only respirators. Although they are both the same kind of resource (a hazmat team), they are different types (based on the equipment they carry). By typing resources, confusion such as this can be eliminated. It eliminates the guess work when another agency or jurisdiction makes a request for a resource because all involved parties will be on the same page, a key factor when mutual aid requests are made.

Any resource management that can be done in advance of being needed for an evacuation will enable agencies to respond more effectively and efficiently when an incident occurs. Every jurisdiction has particular assets it can dedicate to the management of an evacuation. Each jurisdiction should create and maintain an inventory of its assets, so it can better understand its level of preparedness and potential gaps with regards to activity during an evacuation.

It is not enough to just identify required resources. A jurisdiction must also ensure that for each resource identified, it is aware of the responsible entity for that resource. This will allow for a smoother transition when resources require actual transportation. Once it is determined that resources will be required for an evacuation response, those resources should be tracked from their initial mobilization until they are demobilized. Tracking resources efficiently while they are on the incident is essential for personnel safety, accountability, and fiscal control. Resource tracking must account for the overall status of resources at the incident; tracking responsibilities are usually shared between the Planning Section and Operations Section.[1]

# 3 Ordinances

Any evacuation plan must be developed and maintained pursuant to relevant county, state, and federal statutes and regulations. Every effort should be made to ensure that the evacuation plan is compatible with the Federal Emergency Management Agency (FEMA) and the Revised Code of Washington, Chapter 38.52.

Federal and state statutes and regulations will be applicable across all counties in Washington, and are listed below. The statutes and regulations applicable at the county level are specific to each county. Jurisdictions should refer to their respective comprehensive emergency management plan (CEMP) and associated plans for a list of relevant statutes and regulations.

## 3.1 Federal

1. Code of Federal Regulations Title 44, Part 205 and 205.16.
2. Public Law 920, Federal Civil Defense Act of 1950, as amended.
3. Public Law 100-707, Robert T. Stafford Disaster Relief and Emergency Assistance Act.
4. Public Law 93-288, Disaster Relief Act of 1974, as amended.

---

[1] Further information on resource tracking responsibilities may be found in *ICS 300: Intermediate ICS for Expanding Incidents, Unit 6*.

5. Public Law 96-342, Improved Civil Defense 1980.
6. Public Law 99-499, Superfund Amendments and Reauthorization Act (SARA) of 1986, Title III, Emergency Planning Community Right-to-Know Act (EPCRA).
7. Public Law 105-19, Volunteer Protection Act of 1997.
8. Homeland Security Act of 2002.
9. Homeland Security Presidential Directive/HSPD-5.
10. Homeland Security Presidential Directive/HSPD-8.
11. National Response Plan of 2004, with Notice of Change amendments from 2006.
12. Pets Evacuation and Transportation Standards Act of 2006.

### 3.2 State of Washington

1. Chapter 38.52, Revised Code of Washington (RCW), Emergency Management.
2. Chapter 38.08, RCW, Powers and Duties of Governor.
3. Chapter 38.12, RCW, Militia Officers.
4. Chapter 38.54, RCW, Fire Mobilization.
5. Chapter 35.33.081 and 35.33.101, RCW, as amended.
6. Chapter 34.05, RCW, Administrative Procedures Act.
7. Chapter 43.06, RCW, Governor's Emergency Powers.
8. Chapter 43.105, RCW, Washington State Information Services Board (ISB).
9. Chapter 118-04, Washington Administrative Code (WAC), Emergency Worker Program.
10. Title 118, WAC, Military Department, Emergency Management.
11. Washington State CEMP.

## 4 Policies and Procedures

Evacuation activities will be driven by a set of emergency-oriented plans, policies and procedures, implemented by multiple agencies. In addition to the Evacuation Plan, there will almost certainly be several other plans supported by a number of protocols. Emergency management protocols for a region are typically spread among multiple

plans, and these plans are often organized differently and have varied levels of specificity. This makes it difficult for planners to assemble the relevant evacuation elements from the various agencies and to assess whether the plans work together, in coordination with those from other jurisdictions.

Plans for a response to a complex, multi-jurisdictional disaster require coordination and integration of plans with partner federal, state, and local agencies as well as non-governmental organizations and the private sector. The types of plans to consider include, but are not limited to:

- Evacuation plan
- Comprehensive Emergency Management Plan (CEMP)
- Continuity of operations plan (COOP)
- Continuity of government plan (COG)
- Supporting plans
- Neighboring jurisdictions' plans
- County and State plans
- National guidelines (National Incident Management System (NIMS), National Response Framework (NRF))

It is critical to coordinate local evacuation plans with the designated incident commander in the field and the Emergency Operations Center (EOC). They, in turn should coordinate the evacuation plans with neighboring jurisdictions and the state since they may be impacted by any decision to evacuate an area. The state should share consolidated evacuation plans with neighboring states as evacuees may travel to other states to seek shelter, or mutual-aid may be requested from another state. The neighboring jurisdictions need to understand local plans and their expected role and resources in supporting them. Their assistance may also be necessary to execute the evacuation.

# 5 Operational Facilities

Evacuation management involves the collection and processing of significant amounts of information from many sources, as well as the coordination of activities among numerous agencies at multiple levels of government. Such efforts require the use of facilities designed and equipped to support these types of activities. These facilities often serve as the hub of operations for command and control, as well as for the situational awareness, communications and Intelligent Transportation Systems (ITS) discussed in the following chapters of this document.

When identifying and preparing facilities in their jurisdictions, planners need to evaluate the likelihood that these facilities will still be available for use after a serious or widespread incident. Issues such as the resiliency of each facility and its components

systems, as well as the availability of redundant or comparable systems elsewhere should be considered and addressed.

## 5.1 Emergency operations centers

Emergency operations centers (EOCs) play a critical role in the information flow to and from incident command and unified area command posts. They are designed to serve as a hub for command and control operations, to facilitate multi-agency coordination. These sites are typically managed by the local emergency management agency and are staffed by representatives from all other relevant agencies and organizations that will play a role in supporting an evacuation. In some cases, individual agencies may also have a purpose-specific EOC which they operate in tandem with a higher-level jurisdictional or regional EOC.

The core functions of an EOC include coordination; communication; resource allocation and tracking; and information collection, analysis and dissemination. They incorporate multiple voice and data communication systems to support response staff in the field and to maintain links to other critical facilities during emergency response. Each EOC has particular capabilities and resources. Based on these characteristics, each site should have a clear role within the overall evacuation effort. This can vary from collecting information about a particular transportation system, to serving as a communication hub among multiple agencies, to overall coordination of the evacuation. By establishing a known function for each facility, these assets will be used more effectively and will reduce the likelihood of confusion and miscommunication among staff and agencies.

Agencies within King, Pierce and Snohomish Counties have a number of EOCs that can be activated and that will likely play significant roles during the execution of an evacuation. These facilities are operated by a number of agencies that will be involved in the evacuation effort, and each site has particular benefits it can offer. In support of establishing a clear hierarchy in the command structure, at any given time a single facility should be designated as the primary facility from which the evacuation effort is being coordinated. This greatly facilitates participants' understanding of where information, queries and requests should be sent. As overall command transfers from one agency to another, it is possible that the identity of the primary facility will change accordingly.

## 5.2 Traffic management centers (TMCs)

A traffic or transportation management center (TMC) is the hub for gathering and dispersing real-time information about the performance of the regional transportation system. The TMC is able to take information about the transportation network and combine it with other operational and control data to manage the transportation network's performance and to produce traveler information.

From a functional perspective, the TMC monitors congestion levels, identifies and resolves roadway incidents, and facilitates the decision-making that is necessary to set a coordinated response in motion. It also provides the capacity to communicate with the media and the motoring public regarding the status of roadway conditions.

Constant video feeds of the regional highway network provide TMC staff with updates of roadway conditions; thus enabling them to coordinate responses when an incident occurs. The staff will follow protocols for communicating, coordinating and deploying law enforcement and first responder personnel and any other required resources. They will also be able to communicate additional information based on ongoing camera feeds to the responders as they work to efficiently manage the incident and return the roadway to "normal' operating conditions. This constant monitoring and communication of roadway conditions also provides the traveling public with the information they need regarding delays and alternative travel/routing choices that should be considered.

The TMC links various elements of Intelligent Transportation Systems such as variable message signs (VMS), closed circuit video equipment, and roadside count stations. Through the integration of these elements enabling decision makers to identify and react to an incident based on real-time data. TMCs can help reduce incident response times, lower incident rates (mainly secondary incidents), disseminate traveler information and hence reduce congestion and enhance safety.

The benefits of TMCs include:

- Faster incident response and reduction in incident rates.
- Success in reducing congestion on freeways and arterials by broadcasting traveler information and coordinating their activities with state and local police and other responders.
- Improvements in traffic safety by effective incident response and clearance techniques.
- Reduction in secondary incident occurring as a result of improved traveler information.
- Enhanced communication in all aspects of transportation management (planning, design, implementation, operation, maintenance).
- Improved agencies working closely together in a TMC to establish a more consistent, unified response to a situation.

# 6 Situational Awareness

Given the potential for unusual, high-demand travel patterns, compromised infrastructure, and changing traffic volumes and conditions during an evacuation, emergency management personnel will need to continually monitor and assess the status of the evacuation in real time, using this "situational awareness" to implement corrective actions and to provide updated information on evacuation conditions.

Using situational awareness tools for evacuation management requires coordination among agencies that develop and operate the technology (e.g., transportation agencies) and the emergency management incident command structure in charge of the event. Significant progress has been made in recent years in developing relationships among

transportation agencies and emergency responders that can support real-time situational awareness to manage evacuations and other emergency events.

Existing traffic, transit, and transportation system operating strategies may need to be re-examined to take into account the needs, communication requirements, and/or operational concepts that will facilitate effective emergency management of evacuations under extraordinary circumstances.

A variety of technological and procedural strategies can be used to ensure that those who have situational awareness capabilities are able to provide this information to those who need this information to manage the evacuation:

- Center-to-Center connections among transportation and emergency management operations centers to provide access to real-time transportation system information and video to emergency managers.
- Virtual information sharing networks that provide 'desktop' and in-the-field access to video, flow data, and incident reports to emergency responders who are stationed in the field.
- Interoperable regional radio communications networks that allow transportation management official's to speak directly with emergency responders and transportation personnel in the field during evacuations.
- Co-location of emergency management and transportation personnel in emergency management control center locations during emergency management situations to enable face-to-face coordination as well as access to situational awareness technologies from a single location.

A number of technology tools are available or have been implemented to provide transportation and emergency officials with a sense of real-time conditions during an evacuation process. These specific tools are described in the "Communication Networks" and "Intelligent Transportation Systems" chapters of this document.

# 7 Communication Networks

Communications play a fundamental role during an evacuation. Given the large number of agencies, jurisdictions, and assets that will be involved in an evacuation effort, it is critical that all these components of the response team be able to coordinate their activities and share information (via both voice and electronic data exchange). Similarly, the agencies managing the evacuation must be able to convey notifications, instructions and updates to the general public.

During an evacuation, two broad types of communications will need to occur: communications among agencies managing and participating in the response; and communications from the emergency command structure to the general public. Each of these activities will rely on different types of methods, systems, and tools.

## 7.1 Communication Among Agencies

Situational awareness and coordination among emergency response agencies will largely depend on the use of voice and data communications systems connecting those agencies and relevant facilities. These systems and protocols will likely be in place already, and are normally used on a day-to-day basis for a variety of purposes. The following table lists many of the systems available to conduct these communications, and the specific roles they are best suited to fill during an evacuation.

| Communication Method | Planning | Intelligence | Decision Makers | Emergency Notification | Emergency Management | Emergency Response | Traffic Control | Traffic Surveillance and Monitoring | Incident Management | Transportation Provider | Shelter | Recovery |
|---|---|---|---|---|---|---|---|---|---|---|---|---|
| Public Switch Telephone Network (PSTN) | X | X | X | X | X | | | | | | | |
| Homeland Security Information Network (HSIN) | | X | | | | | | | | | | |
| Ring Down Circuits | | | | X | | | | | | | | |
| Emergency Messaging Server | | | | X | | | | | | | | |
| Pagers | | | | X | | | | | | | | |
| Nextel Walkie-Talkie Phones | | | | X | | | | | | | | |
| Radios | | | | X | | | X | | | | | |
| Shared Channels | | | | | | | X | | | | | |
| Swap Radios | | | | | | | X | | | | | |
| Gateways | | | | | | | X | | | | | |
| Shared Systems | | | | | | | X | | | | | |
| State Police Radio Network | | | | | | | X | | | | | |
| Satellite and Wireless | | | | | X | | X | | | | | |
| Government Emergency Telecommunications Service (GETS) / Wireless Priority Service (WPS) | | | | | X | | | | | | | |
| Text Messaging | | | X | | | | | | | | | |
| Regional Police Communications Networks | | | | | | X | | | | | | |
| Regional Fire Communications Network | | | | | | X | | | | | | |
| Federal Interoperability Channels | | | | | | X | | | | | | |
| IP/Internet | X | | | | X | | | | | | | |
| Mobile Data Capabilities | | | | | X | X | | | | | | |
| Virtual Emergency Operation Center (VEOC) Technology | | | X | | X | | | | | | X | |
| AMATEUR RADIO RESOURCES | | | | | X | | | | | | | |
| Amateur Radio Emergency Service (ARES) | | | | | X | | | | | | | |
| Radio Amateur Civil Emergency Service (RACES) | | | | | X | | | | | | | |
| SKYWARN | | | X | | X | | | | | | | |
| Field Report Data | | | | | | | | X | X | X | | |
| Resource Tracking System | X | | X | | X | | | | | | | |
| Geographic Information Systems (GIS) | X | X | | | | | | X | X | X | | |
| Fiber Optics | | | | | | | X | X | X | | | |

**Table 1. Inter-Agency Communication Systems**

Emergency managers assessing their existing communications networks should remember that wide-scale events such as an evacuation will place significant capacity demands on the communications network – many agencies will be conducting simultaneous activities while requiring information and direction from other agencies. The robustness and overall capacity of the systems and networks to be used should be evaluated from this standpoint.

Communications interoperability among agencies and jurisdictions is essential to an evacuation operation. However, such communications are difficult at best among agencies that have radio systems operating in different frequency bands, or operating within the same frequency band but using incompatible modulation formats or trunking techniques that defeat interoperability. The inability of personnel from different agencies with incompatible radio systems to communicate leads to inefficient allocation of resources, inability to coordinate multi-agency activities effectively, and in the worst case, can compromise safety. It is essential that interoperability be an actual, workable, day-to-day solution. Getting emergency response personnel to be able to use interoperability technology, involves developing real standard operating procedures, proper governance, agreements in training, all of which will define how communications equipment can actually be used and shared in the real world.

## 7.2 Communication to the Public

Emergency responders must have the ability to provide information and directions to the public during all phases of an evacuation, whether they are mobilizing, en-route, preparing to return, or unsure of the appropriate course of action.

Several methods exist to provide traveler information to the general public in support of the evacuation, as summarized below.

| Communication Method | Public Education | Public Warning | Public Information | Media Information |
|---|---|---|---|---|
| National Warning System (NAWAS) | | x | | |
| Emergency Alert System (EAS) | | x | | x |
| ICS Public Information System | | x | x | x |
| Reverse-911 | | x | | |
| Employers | | x | | |
| Evacuation Traveler Information | | | x | |
| State-wide 511 | | x | x | |
| State Highway Advisory Radios (HAR) | | x | x | |
| Fixed Dynamic Message Signs (DMS) / Variable Message Boards (VMBs) | | x | x | |

| | | | | |
|---|---|---|---|---|
| Directional Evacuation Route Signage | | | x | |
| Media Outlets | x | x | x | x |
| Print Communications | x | x | | |

**Table 2. Public Communication Systems**

To leverage these communication tools, it is important for jurisdictions to identify available resources within a specific area during the planning process, and then to identify the operational protocols that will enable emergency managers to take advantage of all or some of these systems by coordinating field personnel observations, ITS data, and emergency management instructions and providing them to the appropriate agency or agencies for dissemination through the applicable information systems.

# 8 Intelligent Transportation Systems

The emergence of Intelligent Transportation Systems (ITS) as a mainstream transportation strategy over the last ten to fifteen years is the result of an increasing reliance on our transportation infrastructure to 'do more with less' – carrying ever-increasing traffic, freight, and passenger volumes with relatively little increase in system-wide capacity. Taken as a whole, ITS is a set of enabling tools to support routine traffic management and incident response operational objectives. The increased use of such tools reflects a growing nationwide emphasis on active real-time management of transportation operations, through better managing incidents and increased situational awareness by both transportation managers and travelers through information.

## 8.1 The Role of ITS in Emergency Evacuation

While the challenges of managing a complex, aging, multimodal transportation network are daunting under normal circumstances, at no time will the region's transportation infrastructure be more strained than under a mass evacuation scenario when enormous surges of evacuees will take to the region's roads, rails, buses, and ferries. Furthermore, some of the region's key transportation infrastructure may be compromised through damage or threat of future harm. Therefore it is natural that ITS tools be available to their fullest. There has been increasing success nationally in the use of ITS in response to hurricanes, floods, terrorist threats, and even the September 11th attacks in New York City.

## 8.2 Using Existing ITS Assets in an Evacuation

Jurisdictions charged with emergency preparedness can take advantage of the significant investments made by regional transportation agencies responsible for day-to-day management of the region's freeways, arterial streets, transit systems, and ports. The same ITS infrastructure (which consists of integrated technologies based on a pre-defined, regional system architecture) deployed for transportation system management can also be highly valuable during evacuation scenarios and other responses to planned and unplanned incidents. The Washington State Department of Transportation

(WSDOT), Washington State Patrol, Washington State Ferries, county departments of transportation, City of Seattle, Port of Seattle, and many other cities and regional agencies are already active participants in ITS planning, deployment, and operation.

Because most ITS systems were initially deployed to address transportation management, as opposed to emergency management needs, there may be discrete, high-impact modifications to operating procedures, data sharing, and communications interoperability that will better enable the region to take advantage of ITS capabilities in a range of emergency scenarios. Examples include providing emergency management field personnel with access to traffic video, or providing a means to disseminate evacuation instructions using existing traveler information systems.

## 8.3 Developing an Evacuation 'Concept of Operations'

Like any transportation technology, the use of ITS for evacuation planning is as much about establishing new means of working and inter-governmental collaboration as it is about the technology devices themselves. For example, using centralized traffic signal control to give "green time" priority to a designated evacuation route requires mutual awareness of the available tools, procedures for implementing the priority scheme, and established lines of communication between evacuation coordinators, field personnel, and the transportation agency (or in some cases, agencies) responsible for managing traffic on the corridor.

Regional agreements for the use of ITS technology in transportation operations, including evacuations, are usually referred to as a "Concept of Operations." The Concept of Operations describes overall operational objectives that the technology will support, as well as the institutional relationships that allow ITS to be used to meet those operational objectives. A detailed process for developing a concept of operations for evacuation planning is presented later in this document.

## 8.4 The Regional ITS Planning Framework

Jurisdictions interested in learning more about how ITS technologies can support evacuation and emergency response should familiarize themselves with exiting plans and framework documents that have been developed by several regional and state agencies to guide interagency ITS planning, deployment, and operations in the Puget Sound region and the State of Washington.

However, interested jurisdictions are recommended to consult the following planning documents that provide additional detail on existing ITS infrastructure, operational concepts, inventory, and participating agencies in King County and the State of Washington. Many local cities and emergency management officials in King and neighboring Pierce and Snohomish Counties participated actively in the development of one or more of these studies:

- Puget Sound Regional Council, *Puget Sound Regional ITS Architecture*, 2001.
- King County Department of Transportation, *King County Intelligent Transportation Systems Strategic Plan*, 2005.

- King County Department of Transportation, *Washington State Homeland Security Region 6, Findings and Recommendations on Regional Critical Transportation Infrastructure Protection, Response, and Reconstruction Activities*, 2005.

- Washington State Department of Transportation, *Washington State Intelligent Transportation Systems Architecture*, 2006.

The following diagrams are examples of the framework provided by these regional plans. The first is a concept for Security Management Operations in Washington State, developed as part of WSDOT's Statewide ITS Architecture (2001). The diagram shows existing and planned information flows among WSDOT business units, as well as linkages to Cities and Counties, 911 centers, transit agencies, the Statewide Emergency Operations Center, and Federal authorities. For jurisdictions planning to leverage available ITS communications and information flows for an evacuation, this diagram illustrates the topology of information sharing within the regions, and how local jurisdictions can connect to this network.

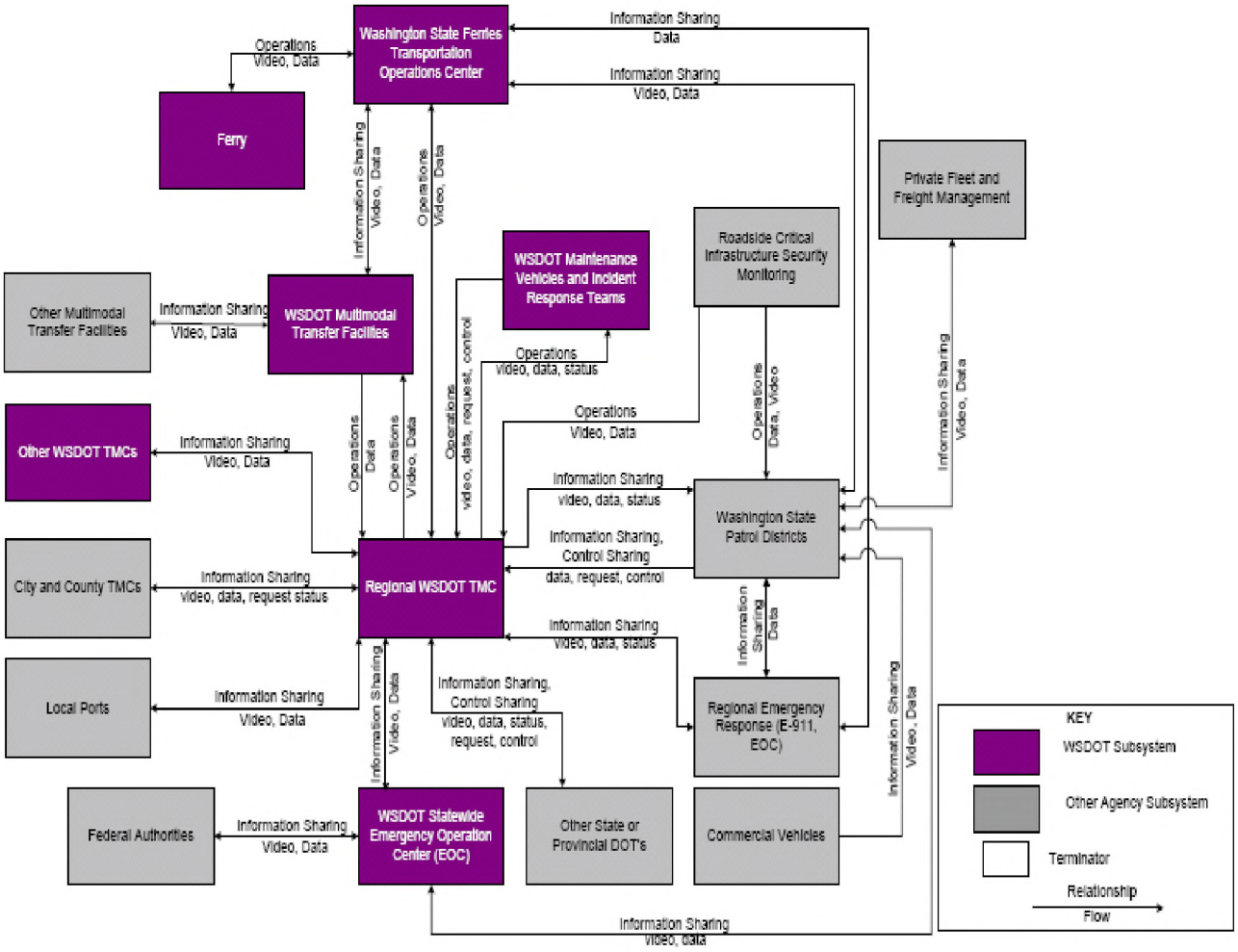


**Figure 1. Washington State Security Management Operational Concept (*WSDOT Statewide ITS Architecture*)**

The second diagram is drawn from King County's ITS Strategic Plan (2005) and illustrates the connections between King County's Traffic Operations Center (TOC), other City traffic management centers, the WSDOT Northwest Region Transportation System Management Center (TSMC), and similar County-level centers in Pierce and Snohomish Counties.

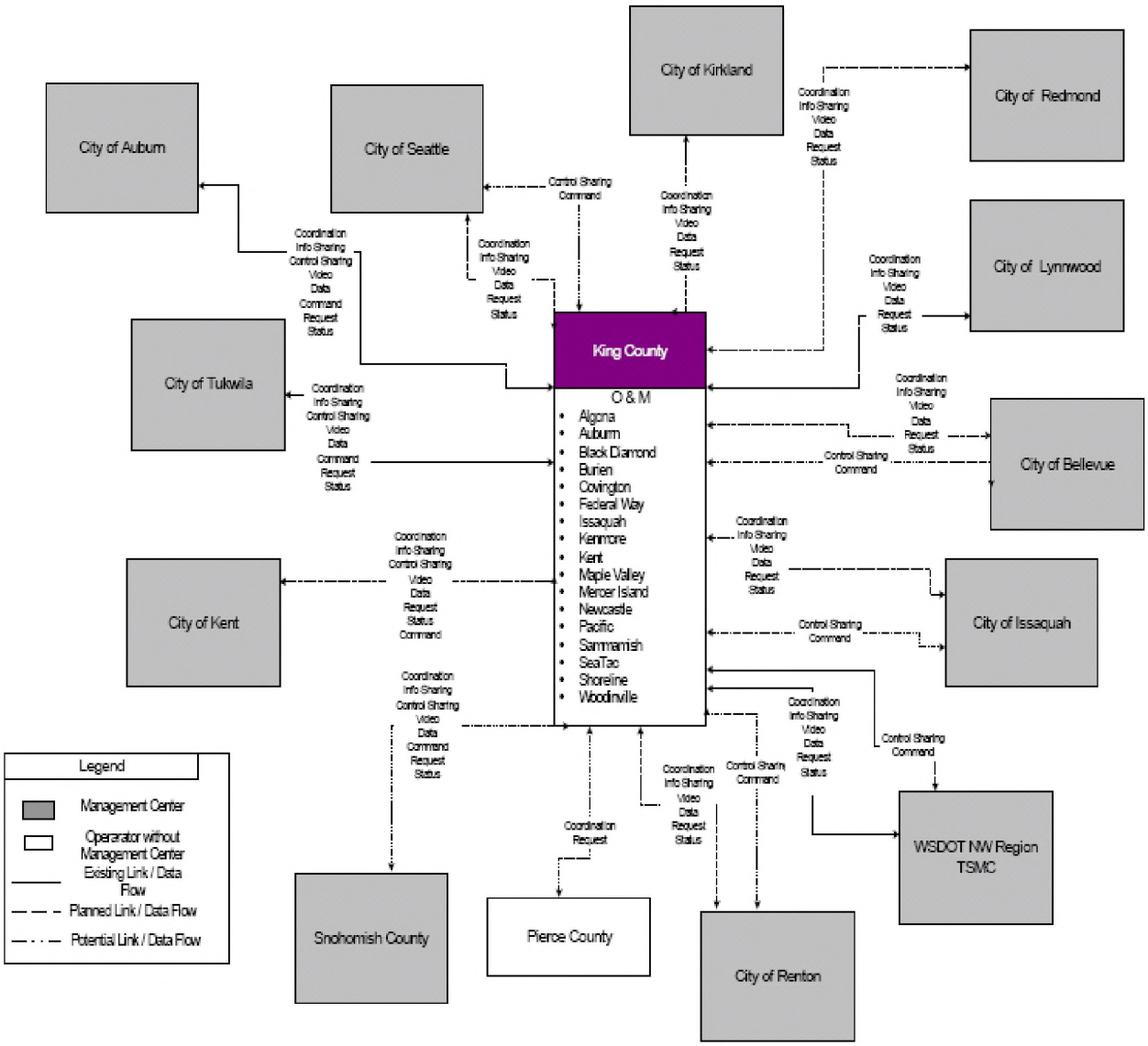


**Figure 2. Operational Concept for Integrated Regional Traffic Control (*King County Strategic Plan*)**

## 8.5 Integrating ITS into Evacuation Planning: A Step-by-Step Process

The following flowchart illustrates a stepwise process for jurisdictions in the region to identify how ITS can support local and regional evacuation planning.

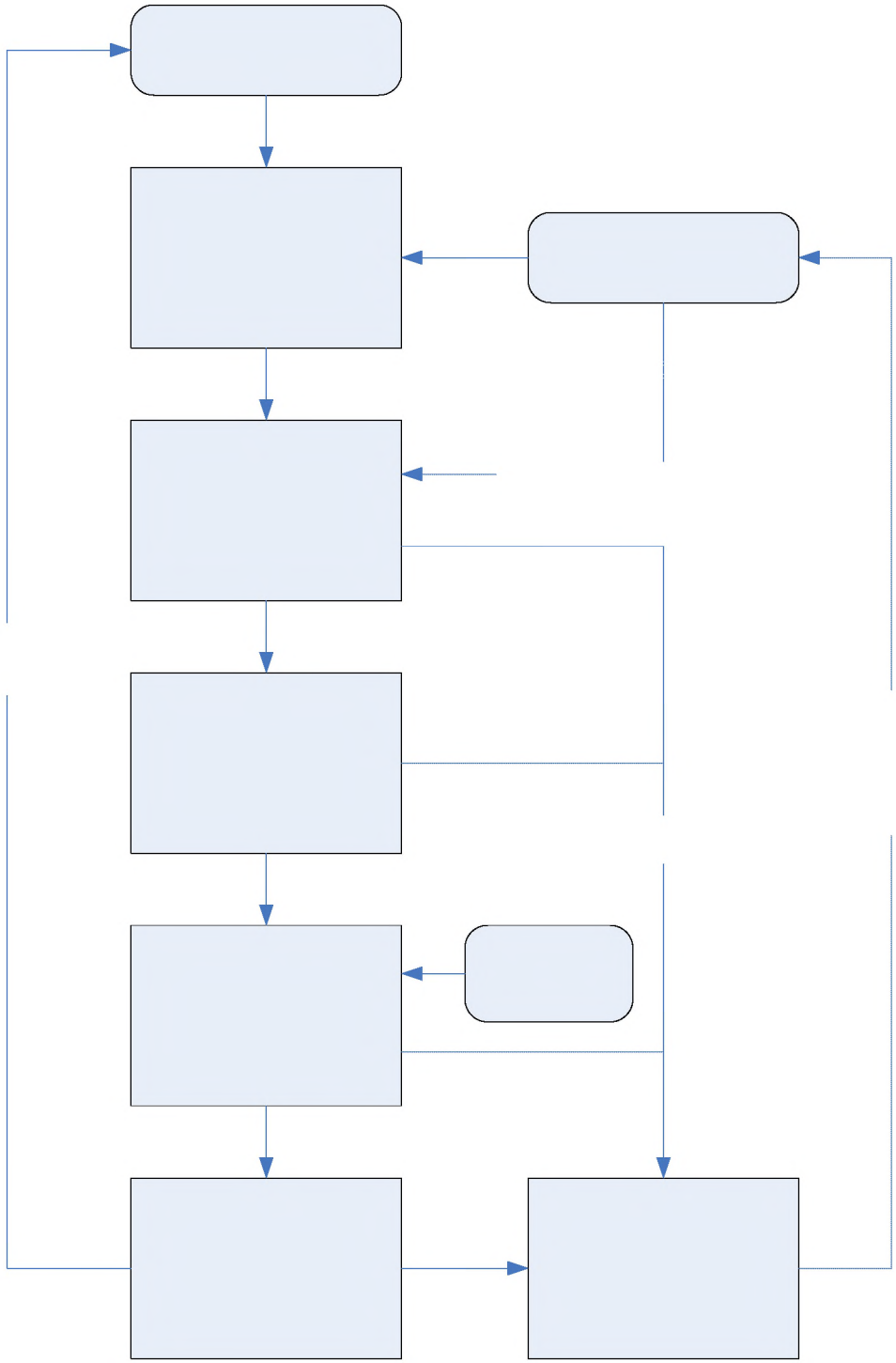

**Figure 3. Incorporating Intelligent Transportation Systems into Evacuation Planning**

## 8.6 Operational Benefits of ITS

Numerous state, regional, county, and municipal actors own, operate, and maintain Intelligent Transportation Systems architecture that could be used in the event of an

emergency evacuation. The principal functions which this technology infrastructure can be classified as Situational Awareness, Transportation Management, and Evacuee Notification functions. Table 3 lists some of the ways in which ITS technology can support broader operational goals during an evacuation.

| ITS Function | Description | Benefits in an Evacuation Scenario | Examples |
|---|---|---|---|
| **Situational Awareness** | Allows authorities to make a real-time assessment of regional traffic, transit, and emergency response conditions using video surveillance and field detection equipment. | • Quicker assessment of transportation system status in the immediate aftermath of an incident (e.g., earthquake damage, blockages) so that diversions can be implemented<br>• Improved monitoring of evacuation progress in real-time, including secondary incidents<br>• Improved response of emergency vehicles by providing information to avoid bottlenecks and delays | • Arterial and Freeway Surveillance Cameras<br>• Arterial and Freeway Traffic Flow Detection<br>• Transit/Emergency Vehicle GPS Positioning Systems |
| **Transportation Management** | Provides a means of active intervention in the transportation system in response to real time conditions, such as modifications to traffic signals. | • A means to provide priority to evacuation routes through increased signal "green time," lane management, etc.<br>• Improved dispatch and utilization of transit resources to facilitate evacuation<br>• Assists field personnel in closure of saturated or damaged highway infrastructure | • Freeway Signal Coordination and Control<br>• I-90/Lake Washington Bridge Reversible Lanes<br>• KC Metro, Sound Transit Control Centers |
| **Evacuee Notification** | Uses advance traveler information systems to provide emergency messages and evacuation instructions to travelers before and during an evacuation trip | • "Push" information on evacuation instructions using reverse 911 infrastructure<br>• Provide pre-trip evacuation information via websites and broadcast media (e.g., regional updates and video)<br>• Provide en-route evacuation information via 511 "floodgate" messages and Dynamic Message Signs in the field. | • Freeway Dynamic Message Signs<br>• WSDOT 511 Telephone Traveler information<br>• Traveler Information Websites |

**Table 3. ITS Operational Benefits**

The following table lists many of the specific ITS systems and components already in place in King County and the state. These are all assets that can be used to help manage an evacuation.

| Statewide ITS Assets | County/Regional ITS Assets | Local ITS Assets |
|---|---|---|
| • WSDOT Northwest Regional Traffic Management Center (TMC)<br>• State Emergency Operations Center (Camp Murray)<br>• WSDOT CCTV Surveillance Cameras<br>• WSDOT 511 Telephone Traveler Information System<br>• WSDOT Traveler Information Website[2]<br>• WSDOT Highway Advisory Radio (HAR)<br>• WSDOT Variable Message Signs (VMS)<br>• WSDOT Roadway Weather Information Systems (RWIS)<br>• WSDOT Ramp Meters<br>• WSDOT Traffic Data Collectors<br>• WSDOT Communications Backbone (Radio, microwave, fiber optic)<br>• Washington State Patrol (WSP) Computer Aided Dispatch (CAD) System<br>• Washington State Ferries Transportation Operations Center | • KC Traffic Operations Center (TOC)[3]<br>• KC Metro Transit Operations Center<br>• KC Regional Coordination and Emergency Communications Center (RCECC) – 911 Call Center<br>• Traffic Operations Centers in adjacent Pierce, Kitsap, and Snohomish Counties | • City Traffic Operations Centers (TOCs) – Seattle, Kent, Tukwila, Bellevue, Issaquah, Renton, Redmond<br>• Field infrastructure – Traffic Detection, Cameras<br>• Portable or fixed Dynamic Message Signs<br>• Communications infrastructure (e.g., fiber optics, emergency management radio)<br>• City websites and/or information hotlines<br>• GPS positioning on local transit vehicles, maintenance vehicles, emergency responders, etc. |

**Table 4. Existing ITS Assets In and Around King County**

# 9 Sheltering Facilities

In addition to enabling the movement of at-risk populations to areas of safety, a jurisdiction is also responsible for arranging care and sheltering for those populations. The jurisdiction should coordinate with the American Red Cross and other stakeholders responsible for mass care that may be able to assist with operating shelters.

[2] http://www.wsdot.wa.gov/traffic/default.aspx

[3] KC provides local traffic/signal management services to contract cities including Algona, Burien, Covington, Federal Way, Kenmore, Pacific, Sammamish, SeaTac, Shoreline, and Woodinville.

Sheltering facilities should be identified, assessed, and prepared in advance of being needed. The selection and preparation of shelters should be based on the populations they will be used to protect. Shelters with a wide range of capacities and functions should be considered since there are many groups who will require specialized facilities and services during sheltering. These include many of the special needs populations (e.g., evacuees from hospitals and nursing homes who will require medical attention; vision- and hearing- or mobility-impaired; evacuees with pets). The ability of a sheltering facility to accommodate such special needs groups will depend on its on-site design and capabilities. Evacuation planners should determine which special needs groups should be routed to particular shelters, and how to incorporate such direction into the evacuation plan. By comparing shelter capacities with the anticipated evacuation population, a jurisdiction can ensure it has made adequate sheltering arrangements, including the appropriate staffing levels for each shelter.

By pre-identifying sheltering facilities, their locations can be evaluated in relation to proposed evacuation routes and other components of the transportation network. Planners should assess shelters' locations, as well as their capacities, facilities and resources, in relation to how evacuee traffic will be routed. If, for example, the major evacuation routes run north/south from a city but the viable shelters are east and west of the city, these issues need to be identified and addressed during the route evaluation and selection process. In some cases, certain shelters may be poor candidates for use due to poor connections with the transportation network.

For large-scale, medium- and long-term evacuations, a jurisdiction should assess the transportation network's ability to enable re-supply and provisioning of the sheltering locations. The relationship of the location of these facilities to the regional transportation network needs to be considered. Some facilities may be easily accessible by surface modes of transportation; however, the circumstances of various incidents may require bringing food and supplies in by air or water, which will require identifying a complete range of transportation resources.

One area that deserves attention is that of registering and tracking the location of evacuees at shelters. This becomes particularly helpful when loved ones attempt to find family members and friends who had to evacuate out of the affected area. A jurisdiction should recognize that the policies and procedures of outside shelter operators may be inconsistent with those of a jurisdiction. It has been the American Red Cross' policy not to share its list of registered shelter evacuees with public authorities. Consequently, a jurisdiction would have to designate someone to be on-site to participate in and observe the registration process. While more of an issue in the case of long-term sheltering, there could be instances where children and families are co-located in shelters with registered sex offenders and citizens with outstanding arrest warrants. Jurisdictions need to address in advance how these potentialities will be handled (e.g., law enforcement presence at the shelter), and the legality of their options.

Having jurisdiction personnel at shelters is also beneficial because it allows current evacuation information to be shared with evacuees at the shelters in a timely fashion. In instances where shelters are not jurisdiction run, jurisdiction personnel should work closely with shelter operators so all involved parties are aware of the status of evacuation operations.

### 9.1.1 *PETS Act*

According to the 2007-2008 American Pet Products Manufacturers Association (APPMA) National Pet Owners Survey, 63% of U.S. households include a pet. This equates to 71.1 million homes. In the aftermath of Hurricanes Katrina and Rita, the Pets Evacuation and Transportation Standards Act (PETS Act) was signed into law on October 6, 2006. The PETS Act amends the federal Disaster Relief and Emergency Assistance Act, to require federal, state and local emergency preparedness plans to include provisions for rescue, care, and shelter of pets and service animals during disaster relief. These new federal requirements must be considered when address evacuation and sheltering plans.

### 9.1.2 *Inquiry System*

Organizations establishing shelters often establish a disaster welfare inquiry system. Many locations use a 211 or 311 telephone number for such shelter information to prevent overburdening the 911 system and ensure its availability for true emergencies.

### 9.1.3 *Shelter Factors*

- Water and Meal Ready to Eat packages (MREs) supplied at shelters will be as follows:
  - Quantity of Meals ≡-Shelter Capacity x 2 meals/day x 3 days
  - Quantity of Water ≡-Shelter Capacity x 3 liters/day x 3 days
- Sanitation Facilities will be provided as follows:
  - Quantity of Port-a-lets ≡-1 toilet per 40 people
  - Quantity of Hand Washing Facilities ≡-1 hand washing facility per 40 people
  - Showers ≡ 1 shower per 40 people
- American Red Cross Hurricane Evacuation Shelter Guidelines (ARC-4496) January 2002 are standard guidelines to be utilized for all Red Cross supported evacuation shelters.
  - Shelter space is calculated based on 20 sq. ft / person
  - Shelter space for individuals with special needs is calculated at 40 sq. ft. / person (20 sq. ft. for the individual with special needs and 20 sq. ft. for their caregiver)
  - General population shelter staffing: 10 shelter staff per 100 clients
  - Security: 1 security guard per entrance (24 hours a day)

## 9.2 Assembly Points

In some cases, a jurisdiction may need to identify interim, short-term locations where people can gather, as part of the evacuation transportation plan. Due to the uncertain nature of incidents that trigger evacuations, the evacuees may be able to return directly to their residence or place of employment from the assembly point once the jurisdiction has indicated that it is safe to do so. For incidents of longer duration, these assembly points can serve as collection points for evacuees who have walked or ridden transit from the at-risk area, and who now must wait for secondary transport (buses, etc.) to longer-term sheltering facilities.

As outlined in the Shelters section, the same considerations in regards to staffing levels, capacity and function apply to assembly points. Pre-identifying sufficient assembly points in relation to the transportation network and evacuation routes will allow these locations to be incorporated into the evacuation plan.

In some communities, an intermediate reception site for evacuees is established. These sites may be used as a central location to gather large numbers of evacuees prior to evacuation to specific shelters. The sites may also be used as gathering locations to transfer evacuees who have arrived by transit, school buses, and ferries or by foot to over-the-road coaches for long-distance transport to their final shelter location.

## 9.3 General Population Shelters

General population shelters are ordinary sheltering facilities accommodating evacuees with their own transportation and those receiving public transportation assistance by the local, state and federal governments. Facilities may be publicly or privately owned and frequently include schools, places of worship, community centers and others identified and selected by the emergency management agencies. Sheltering capacities vary depending on the size of the facility and are managed by municipal agencies, American Red Cross, faith-based organizations and other voluntary nongovernmental organizations (NGO). General population pre-impact shelter capacity is calculated at 20 square feet per person. A calculation of 40 square feet per person for longer-term sheltering is used for post-impact sheltering.

Shelters should be identified "in-state" and "out-of-state" with sufficient capacity to meet the general population sheltering requirements specified below. With any of these shelters, transportation resources need to be in place to move evacuees from a point of origination, such as an assembly point, to the identified sheltered destination. And in most instances, commercial transportation assets (buses) will need to be available to move evacuees from their local assembly points to each shelter.

## 9.4 Special Needs Shelters (SpNS)

Special needs shelters are stand-alone facilities designed to host non-institutionalized evacuees requiring a higher level of skilled medical care, specialized equipment, and supplies typically unavailable in a general population shelter. SpNS evacuees include those requiring a higher level of on-going medical care, but not hospitalization. SpNS

evacuees may include dialysis, hospice, and other patients. These facilities are intended to provide uninterrupted electrical power flow with adequate backup generators.

Some evacuating cities may institute medical triage for transportation-assisted evacuees at assembly points. Evacuees identified to require special medical assistance will be assigned and transported to a Special Needs Shelter. Acute patients living at home may require transport via ambulance, requested directly by the evacuee.

A common practice adopted by medical triage units is the application of a color system for segregating evacuees by the level of care required. The triaging typically occurs as soon as possible, possibly at an assembly point, so that appropriate destinations for individual evacuees can be determined. This is done by attaching a color armband to each evacuee. For example, red is used for indicating a Special Needs Shelter (SpNS) which would accommodate evacuees requiring transportation services and full medical support. Yellow is used for co-locating individuals who are medically stable but have chronic conditions at general population shelters. These evacuees would include diabetics, individuals with long-term prescription dependencies, those who are morbidly obese, or with behavioral health challenges.

## 9.5 Pet Sheltering

Pets will be sheltered in both separate pet shelters and in pet shelters that are co-located with General Population shelters.

## 9.6 Shelters for Unique Populations (SUP)

Shelters for Unique Population need to be identified for prisoners and registered sex offenders. These shelters are typically designated and managed by one of the state's social services or corrections agencies, and need to be compliance with state legislation. For these shelters to operate effectively, practices need to be employed that ensure that each individual is identified upon his/her arrival/departure, and access and egress controls are in place.

## 9.7 Shelter Support

### 9.7.1 *Shelter Staffing*

The American Red Cross will recruit and train shelter operators for "in-state" and "out-of- state" shelter support. It will supply "Ready Teams" comprised of 4 volunteers per team; these teams will need to be prepared to open shelters. The Red Cross will also recruit and train people "in-state" for shelter staffing and will temporarily employ them once an event occurs. This staffing capacity will meet the requirements for the total "in-state" and "out-of-state" sheltering requirement as previously established. In addition, a contractor program should be available to provide shelter staffing should a shortfall occur.

### 9.7.2 *Shelter Commodities*

State and Federal resources for commodities and food / water to support an in-state evacuation sheltering requirement should be identified. For example, support capacity should be capable of feeding 150,000 people for 5 days with re-supply from FEMA logistics within 24 hours. In addition, consideration needs to be given to establishing local and in-shelter catering services and feeding kitchens. These resources provide additional feeding capacity that is needed to avoid total reliance on MREs. They also provide an option if areas become inaccessible during a disaster and resupplies cannot be delivered. Contracts need to be in place to activate these services and extend their duration.

As a health precaution, daily prepared meals should be instituted in lieu of a continuous supply of MREs if an event continues for an extended period of time. The preparation of meals could prevent some potential health issues associated with young and old continuing to eat MREs.

Coordination with the American Red Cross should be continuous to ensure that that emergency supplies are being pre-positioned with their chapters for relief support.

### 9.7.3 *Shelter Medical*

American Red Cross managed shelters will staff one registered nurse or first aid person per 120 evacuees.

Ambulances should be staged based on 'centers or clusters' of evacuation populations. One ambulance should be staged in cluster areas for populations less than 5,000 evacuees. Two ambulances should be positioned for more than 5,000 evacuees in a cluster population.

Mental health staff should be made available.

Federal medical assets should include:

- One mobile medical strike team per every 10,000 evacuees.
- Medical Stations (FMS) with ambulances. Ten FMS should be in place for a maximum bed capacity of 2,500 patients.
- U.S. Public Health Service (USPHS) Rapid Deployment Teams.
- Augmentation of local emergency rooms by medical staff.
- Disaster Medical Assistance Teams (DMAT Shelter Security).

Shelter security should be the responsibility of the shelter operator working with local emergency management and law enforcement officials. Local law enforcement should retain full jurisdictional authority. Federal resources should include contracted officers that can be deployed to shelter locations as necessary, following a state request.

### 9.7.4 *Shelter Communications*

To assure operability, evacuation communications may be supported by various modes including commercial land lines, wireless data and cellular capability, push-to-talk handsets, handheld satellite telephones, wireless priority service (WPS) capable cellular telephones, Government Emergency Government Emergency Telecommunications Service (GETS) cards and broadband air cards. The shelter sites should have primary and redundant communications capabilities in place and functional prior to H-48 hours. Federal and State officials, along with American Red Cross, should be:

- Providing assessments of capabilities and equipment required to support the shelters which cannot be met by State and parish resources.
- Analyzing and augmenting connectivity between shelters, command and control, and transport vehicles.
- Ensuring shelter site personnel are trained to use any specialized communications equipment and services that are supplied to them.

Table - Communications Requirements by Shelter Site

| Location | Primary | Redundant (*=required) |
|---|---|---|
| Shelter sites are destination points for evacuees. Shelter sites vary by size and purpose. Not all shelter sites have been identified. | **Large Capacity General Population (1000+ evacuees)**<br>• Multiple landlines for voice and fax, plus high speed data (for internet).<br>• GETS cards<br>• 12-24 (based on shelter size/ capacity) Nextel phones with Push-to-talk group two-way radios, each with charger and spare battery.<br>• commercial cellular service | • Satellite phones (2) *<br>• WPS enabled cellular<br>• Ham (amateur) radio operator |
| | **General Population (average capacity +/- 100- 300 evacuees):**<br>• Landlines for voice fax and high-speed data (Including Internet).<br>• Six (6) Nextel phones with Push-to-talk two-way radios, each with charger and spare battery.<br>• GETS cards<br>• commercial cellular service | • Satellite phones (2)*<br>• WPS enabled cellular.<br>• Ham (amateur) radio operator |
| | **Special Needs Shelters:**<br>• Multiple landlines for voice and fax, plus high-speed data (including Internet)<br>• GETS cards<br>• Nextel phones with Push-to-talk group two-way radios.<br>• commercial cellular service | • Satellite phones (2)*<br>• WPS enabled cellular.<br>• Ham (amateur) radio operator |
| | **Pet shelters:**<br>• Two or three landlines to single-line phone sets<br>• Nextel cellular phones for intra-site communications<br>• commercial cellular service. | • Satellite phone (2)<br>• WPS enabled cellular, GETS for staff. |

**Table3. Sample Communications Requirements by Shelter Site**

## 10 Vehicles

Given the large potential number of evacuees who may be involved in an evacuation, it is essential that all modes of transportation are employed to the greatest and most effective degree possible. An evacuation plan should be designed to make full use of all the systems available within the jurisdiction or region. Depending on the particular jurisdiction, automobile, transit (bus and rail), pedestrian and boat travel can all be incorporated into specific transportation strategies and tactics.

## 10.1 Transportation Modes

When planning an evacuation, a jurisdiction should consider all transportation options, including all modes, as viable alternatives. Although roadway and highway networks will be principal conduits for moving large number of people, the nature and consequences of a range of events will dictate what transportation options are best. With the foreknowledge of capacity and what transportation resources are available by corridor, decisions can be made as to how to distribute evacuees among modes. Within Washington State, the likely candidates for evacuation modes and networks include:

- Local roadways
- Highways
- Private vehicles
- On-road transit (bus and para-transit vehicles)
- Commuter and regional rail systems
- Ferries
- Pedestrian movement

In most evacuation scenarios, the majority of evacuee movement will take place on roadways and highways, in both personal vehicles and transit vehicles. Most people use the highways to evacuate whether they are traveling in their own vehicle, or on a bus, or using the roadway to access a train or plane.

While it is anticipated that a large portion of the evacuating population will use private automobiles for transportation, it is important to remember that a significant number of evacuees will not have this resource available to them. For this group, the transit system and public service vehicles will play a significant role. In particular, buses will play a key role in evacuating transit-dependent segments of the population, from either designated pick-up points or from particular facilities (e.g., hospitals, nursing homes, etc.)

Depending on the circumstances, a significant number of people may evacuate by walking from the evacuation area or to intermediate evacuee pick-up locations. Given the strong potential for conflicts between pedestrian and vehicle-based evacuees, it is essential to ensure dedicated evacuation routes exist for each type of movement. Identification of routes for each mode should be conducted ahead of time.

## 10.2 Passenger Vehicle Sources and Capacities

Evacuation planners will need to identify the types and quantities of vehicles available to transport evacuees in their jurisdiction, in order to anticipate how quickly evacuees can be transported from at-risk areas. This assessment should ideally incorporate as many potential sources of vehicles as possible, including:

- **Transit agencies** – play an integral role in the transportation of evacuees, typically both by providing vehicles and drivers as well as by offering some ITS-type services; include both large-scale regional operators and smaller local services.

- **Rail operators** – such as Amtrak and commuter rail services can provide high capacity transportation to and from certain locations within the region.

- **Private bus companies** – such as Greyhound can provide over-the-road coaches and drivers to evacuate people including those with special needs or to transport responders.

- **School bus companies** – can supplement bus service offered by other providers; in many cases the availability of their vehicles and drivers will be dependent on the time of day and day of week.

- **Tour bus companies** – may operate in popular tourist areas and can offer additional vehicles.

- **Miscellaneous agencies and private organizations** – such as hotels, rental car companies, and residential institutions often have privately operated shuttle buses and similar vehicles.

- **Taxi companies** – represent a potential means of adding transportation capacity, although these sources can be more difficult to coordinate effectively.

- **Ferry companies** – operate throughout the Puget Sound region and beyond. While limited in the locations at which they can pick up and drop off evacuees, they are well-suited to support evacuation movement in specific areas.

The assessment should take into account variables such as passenger capacity, location (operation range and storage), availability of operators at different times (e.g., weekends and nights), and the ability to transport people with special needs.

### 10.3 Emergency Response and Support Vehicles

An assessment of transportation resources should also encompass the number of vehicles available to fill agency-specific functions and transport emergency management staff. Examples include:

- Law enforcement vehicles (e.g., patrol cars, troop transports)

- Fire department response vehicles

- Paramedic vehicles and ambulances

- Mobile command post and communications vehicles
- Public works and construction vehicles (e.g., cranes, bulldozers, backhoes)
- Tow trucks
- Equipment transport trucks
- Command staff vehicles
- Miscellaneous vehicles for individual staff travel

All of these will likely be needed to transport staff and equipment to their assigned locations during an evacuation, or to perform specific support tasks.

As with passenger transport vehicles, evacuation planners should look beyond those vehicles owned and operated by government agencies. State and local DOTs and public works departments generally have access to a number of private sector companies that can provide evacuation support services through existing or emergency contracts including:

- **Highway contractors** – can secure roadway work zones to maximize safety and roadway capacity for evacuees; and provide personnel, heavy equipment, and materials through contracts to support an evacuation.
- **Towing industry** – can provide personnel and tow trucks to remove disabled vehicles from an evacuation route
- **Trucking industry** – can provide trucks and drivers to deliver supplies and equipment to support an evacuation
- **Service patrols** – can provide motorist assistance including vehicle repairs in the field, fuel, and traffic control.

Planners will need to review the terms of contracts with such providers and, where necessary, advocate for specific clauses that will help ensure support during emergency events such as an evacuation.

# 11 Miscellaneous Materials

The preceding chapters of this document list the major assets and resources necessary to support an evacuation; these are the critical elements for effective evacuation activity. Evacuation planners should remember, however, that there are many other components involved in the activities taking place during an evacuation. While many of these are smaller or more mundane in nature, they can still have a significant impact on overall success. The following is a list of representative miscellaneous items to be considered for procurement, but which could be easy to overlook during the planning process:

- Traffic management resources:

- Centrally-controlled traffic signal system
- Moveable concrete barriers
- Traffic cones or drums
- Mobile variable message signs (VMS's)
- Arrow boards and other portable signs

- Bridge assessment teams and other specialized staff to perform specific roles
- Fuel caches or identified refueling facilities (for both emergency response vehicles and evacuees' vehicles)
- Batteries and power supplies for mobile radios and other used equipment used by field staff
- Credentialing materials (and associated policies and procedures) to enable relevant staff to travel unimpeded during the response

The purpose of this chapter within the overall King County Evacuation Plan Template is to encourage planners to examine their plans and procedures and coordinate with all appropriate stakeholders to carefully identify all of the supporting staff, equipment and resources necessary to support intended operations. Coordination with other stakeholders is critical; it is recognized that any one planner or group of planners will not be aware or knowledgeable of the full complement of equipment and resources or what resources will be the most effective depending on particular circumstances.